AKZ950/..-5.08-GREEN-INV

Technical Data

Wire Sizes	
Solid min	0.2 mm²
Solid max	4.0 mm²
Stranded (flexible) min	0.2 mm²
Stranded (flexible) max	4.0 mm²
Stranded with Ferrule min	0.25 mm²
Stranded with Ferrule max	2.5 mm²
Dimensions	
Stripped Length	7.0 mm
PCB Hole Diameter	-
Materials	
Clamp	Brass
Screw	Steel
Contact Pin	Brass

Insulating Material	
Material	PA 6.6
Flammability Class	UL 94 V-0
Temperatures	
Operating Temperature	-30 °C - 105 °C
Wave Soldering Process	
Soldering Temperature, recommended	-
Peak Soldering Time, recommended	-
Reflow Process	
Soldering Temperature, recommended	-
Peak Soldering Time, recommended	-

Order Data (Spacing 5.08 mm)

Poles	Width (mm)	Article Designation	Article Number	PU
2	11.66	AKZ950/2-5.08-GREEN-INV	50950027028F	200
3	16.74	AKZ950/3-5.08-GREEN-INV	50950037028F	200
4	21.82	AKZ950/4-5.08-GREEN-INV	50950047028F	200
5	26.90	AKZ950/5-5.08-GREEN-INV	50950057028E	100
6	31.98	AKZ950/6-5.08-GREEN-INV	50950067028E	100
7	37.06	AKZ950/7-5.08-GREEN-INV	50950077028E	100
8	42.14	AKZ950/8-5.08-GREEN-INV	50950087028D	50
9	47.22	AKZ950/9-5.08-GREEN-INV	50950097028D	50
10	52.30	AKZ950/10-5.08-GREEN-INV	50950107028D	50
11	57.38	AKZ950/11-5.08-GREEN-INV	50950117028D	50
12	62.46	AKZ950/12-5.08-GREEN-INV	50950127028D	50
13	67.54	AKZ950/13-5.08-GREEN-INV	50950137028D	50
14	72.62	AKZ950/14-5.08-GREEN-INV	50950147028D	50
15	77.70	AKZ950/15-5.08-GREEN-INV	50950157028D	50
16	82.78	AKZ950/16-5.08-GREEN-INV	50950167028D	50
17	87.86	AKZ950/17-5.08-GREEN-INV	50950177028D	50
18	92.94	AKZ950/18-5.08-GREEN-INV	50950187028D	50
19	98.02	AKZ950/19-5.08-GREEN-INV	50950197028D	50
20	103.10	AKZ950/20-5.08-GREEN-INV	50950207028D	50
21	108.18	AKZ950/21-5.08-GREEN-INV	50950217028D	50
22	113.26	AKZ950/22-5.08-GREEN-INV	50950227028D	50
23	118.34	AKZ950/23-5.08-GREEN-INV	50950237028D	50
24	123.42	AKZ950/24-5.08-GREEN-INV	50950247028D	50

Colours

GREEN, RAL 6018

LIGHT GREEN, similar RAL 6018

Colours according to RAL, there may be variations on colour due to production conditions. Special colours on request.

Counterparts (Spacing 5.08 mm)

Pin Strip / Terminal Block

STLZ950-INV AKZ950 AKZ1100 AKZ1110 AKZ1200 AKZ4951

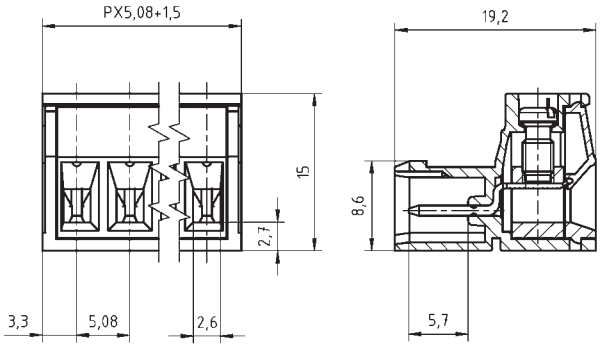

Accessories

Figure	Designation	Article Number
	Bridge, 2-pole, insulated, BRI/2-5.0/5.08-LIGHT GREY	50000000006
	Bridge, 3-pole, insulated, BRI/3-5.0/5.08-LIGHT GREY	50000000007
	Coding Star CS3-5.0/5.08-RED	50000000025

See pages 282 ff for detail and general accessories and see pages 12/13 concerning services.

Ratings

		c UL us		VDE	
Usegroup	B	C	D		
Rated Voltage	300 V	-	300 V	250 V	
Rated Current	10 A	-	10 A	10 A	
Overvoltage Category				III	
Rated Wire Size				min	max
solid	AWG 28-12	-	AWG 28-12	0.2 mm² (4 A)	2.5 mm² (10 A)
stranded	AWG 28-12	-	AWG 28-12	0.2 mm² (4 A)	2.5 mm² (10 A)
Torque	0.50 Nm	-	0.50 Nm	0.50 Nm	
Screw Size	M3	-	M3	M3	
Test Voltage	1.6 kV	-	1.6 kV	4.0 kV	
Pollution Degree				3	